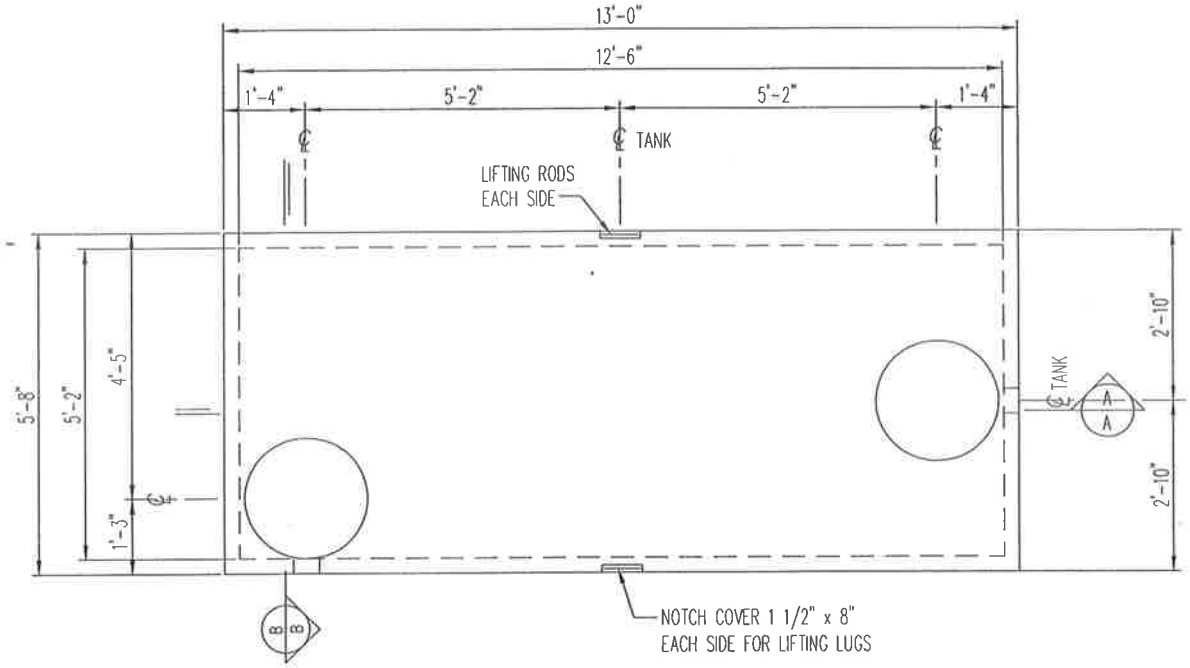

1600 GALLON TANK

1/2" = 1'-0"

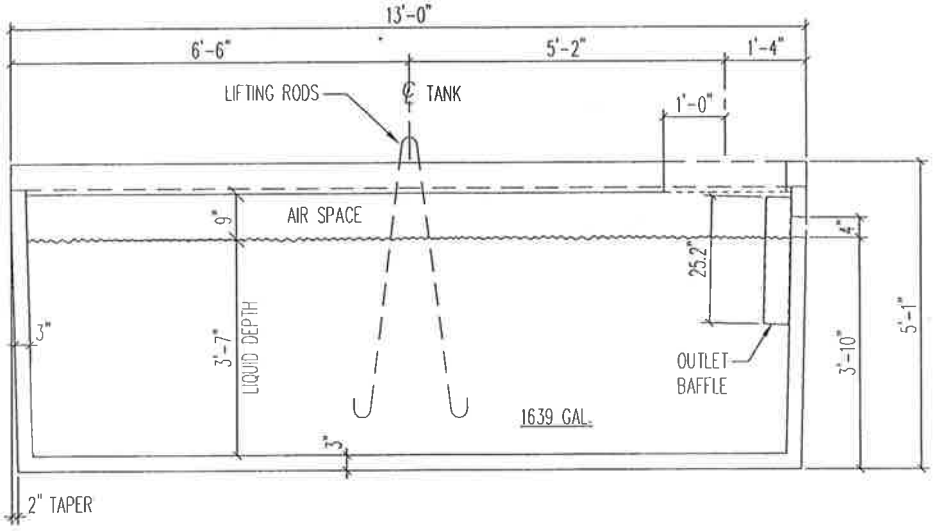

A/A SECTION

1/2" = 1'-0"

NOTE:

1. PROVIDE MINIMUM 1" CLEAR BETWEEN TOP OF BAFFLE AND UNDERSIDE OF LID.
2. PUMP TANK (PT) HAS NO OUTLET BAFFLE.

1600 GALLON SEPTIC OR PUMP TANK (1600 ST-R OR 1600 PT-R)	Brown Wilbert	WEIGHT=14,000# MAX. SOIL COVER= 7'-0"

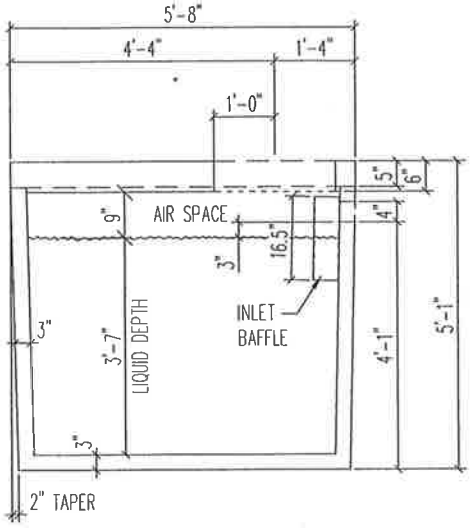

B
B

SECTION

1/2" = 1'-0"

NOTE:

1. PROVIDE MINIMUM 1" CLEAR BETWEEN TOP OF BAFFLE AND UNDERSIDE OF LID.
2. PUMP TANK (PT) HAS NO OUTLET BAFFLE.

1600 GALLON SEPTIC OR PUMP TANK (1600 ST-R OR 1600 PT-R)	Brown Wilbert	WEIGHT=14,000# MAX. SOIL COVER= 7'-0"